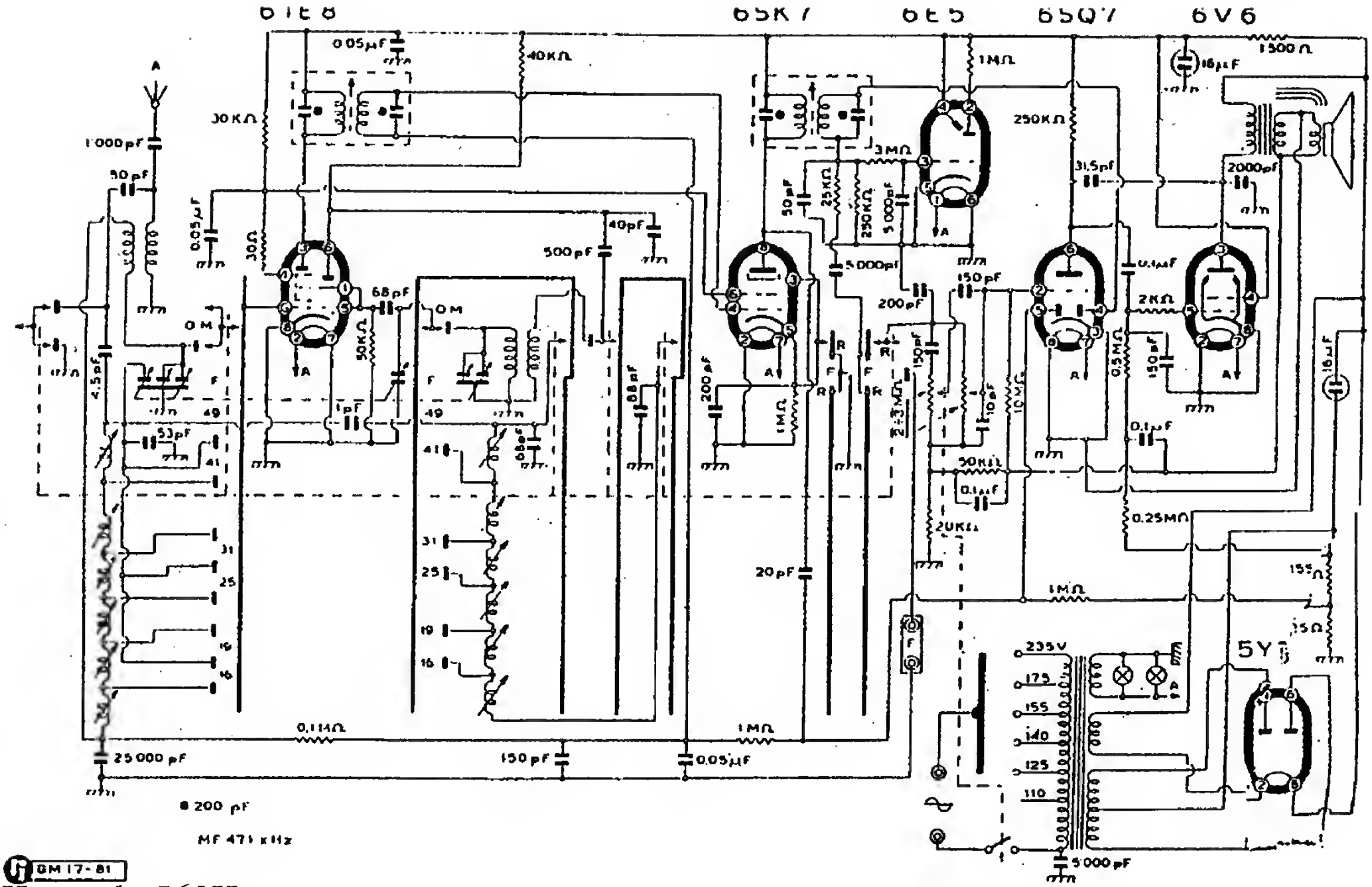

Kennedy 560K